PORTOFOLIO

in this book you will find stories of
how ideas become something real.

MHM

Michel H. Moussatche

Industrial Designer

"When I'm working on a problem, I never think about beauty. I think only how to solve the problem. But when I have finished, if the solution is not beautiful, I know it is wrong."

-Richard Buckminster Fuller

HAVE
idea
brief
dream...

DEFINE
objectives
market
timelines...

RESEARCH
market
consumers
necessities...

CREATE
concepts
sketches
models...

DEVELOP
form
materials
engineering...

PRODUCE
design for mfkt
colateral material
packaging...

SELL
sellthrough
market placement
consumer feedback...

MEDX

lowback strenght pro - 1 year

MHM
2024

MEDX

idea

To provide a solution for people to strengthen their lowback on their own.

MEDX

market

home exercise equipment

objectives

offer as a prescription device
sold at the doctors office

availlable to purchase online

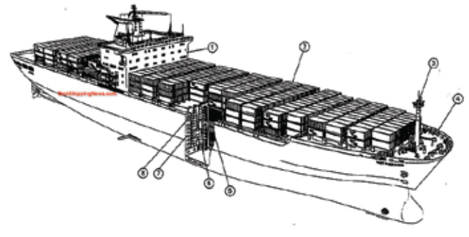

overseas manufacturing

MEDX

research

1-A. Pelvic Stabilization/Immobilization

(Lumbar Extension)

An elaborate pelvic restraint mechanism is built into the Lumbar Extension Machine. Its appropriate application is easily identified visually — if the tubular pads compressed against the patient's pelvis rotate on their own axis, the hip and thigh muscles are producing measured torque. Tighten the restraints until the pads fail to rotate when the patient flexes and extends through the range of movement. (See "104-Point Checklist" for further information)

Lumbar Extension Restraint System

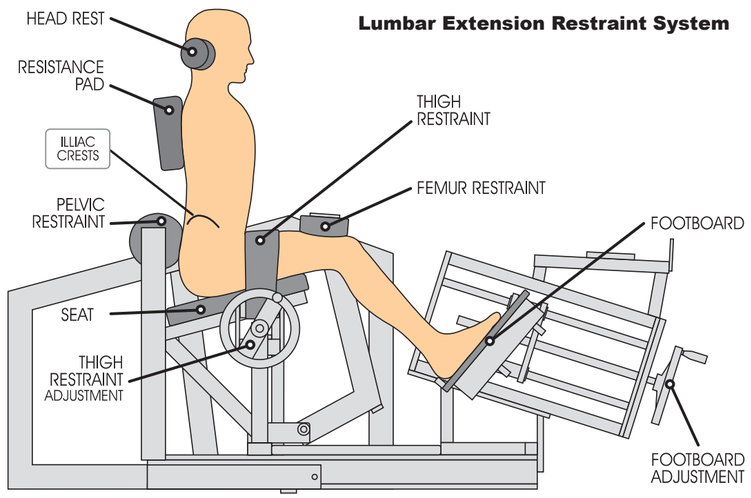

The lumbar extensors muscles are isolated in the following manner:

1. Force imposed against the bottom of the feet is transmitted by the lower legs to the femurs at an angle of approximately 45 degrees.
2. Large pads located above the lower thighs limit upward movement of the knees.
3 . A heavy belt prevents upward movement of the upper thighs and pelvis.
4. A round pad prevents movement of the pelvis in the direction of extension.

72° **Isolated lumbar Range of Motion**

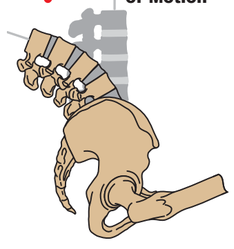

Properly restrained in this machine, the pelvis cannot rotate. It is the clinician's duty to check for pad rotation, and tighten restraints until it does not occur. Without total restraint of the pelvis, force from the muscles of the hips and thighs would contribute to torque readings, making it impossible to determine the true force-production capability of spinal muscles as well as range of isolated lumbar-spinal movement.

existing equipment

LUMBAR EXTENSION

The MedX Lumbar Extension Machine can provide resistance over a full range of isolated lumbar motion (72 degrees), or over a selected limited range. In the exercise mode, a compound weight stack provides resistance from 10 to 400 foot pounds in increments of one foot pound.

LUMBAR STRENGTH

Patented, effective pelvic restraint system that keeps gluteus and hamstring muscles from interfering with the targeted exercise area

Provides isolation of the lumbar spine muscles, increases stability and allows specific, intensive strengthening

Regular use may help prevent injuries, remedy chronic back pain and contribute to disc hydration

MEDX

initial concepts

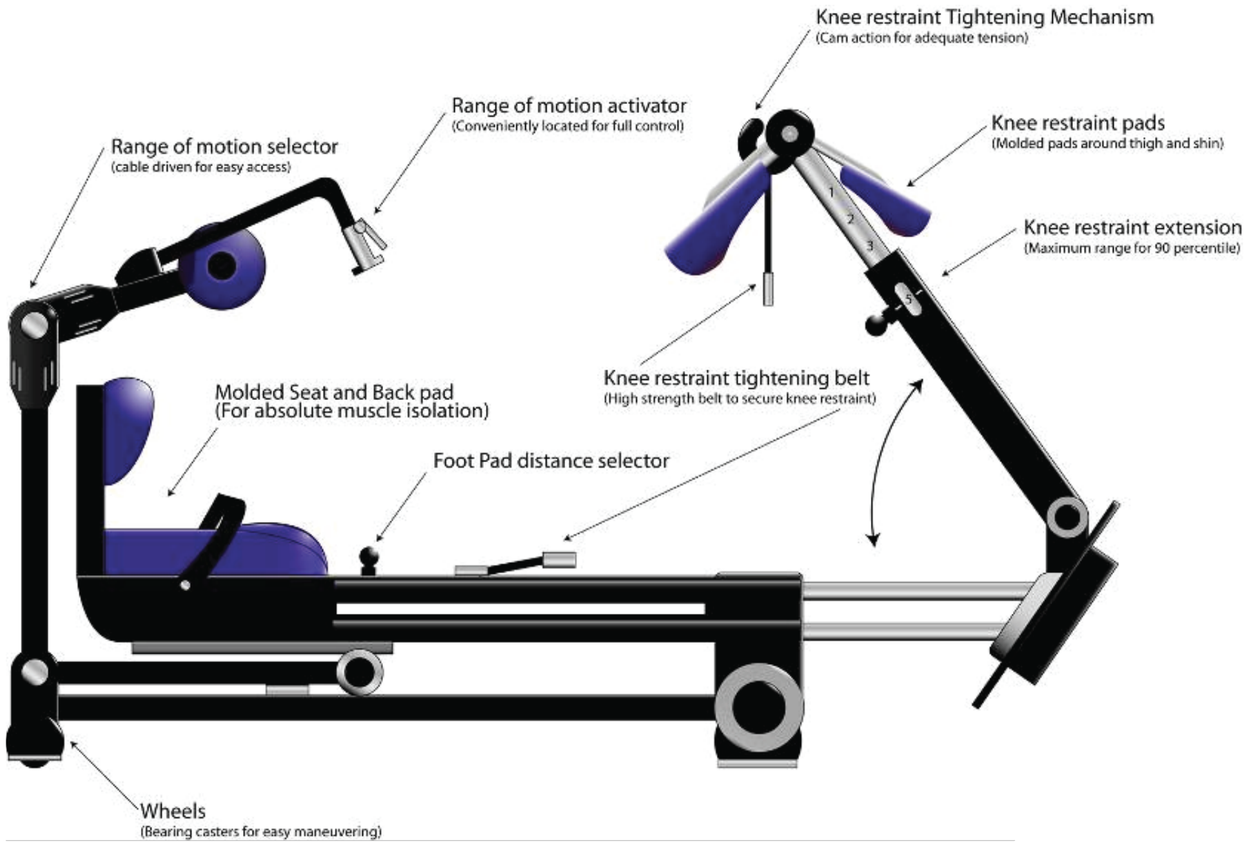

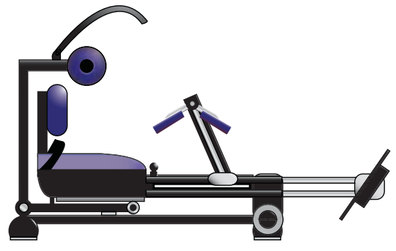
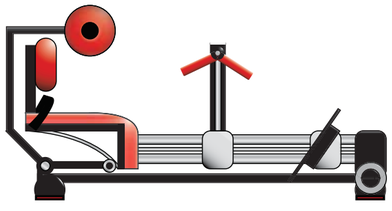
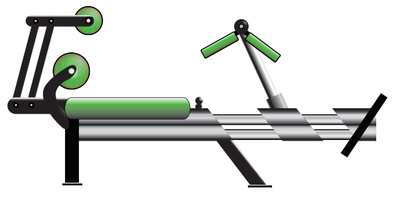

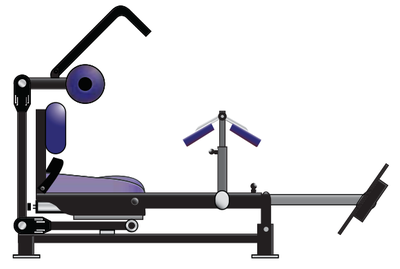

MEDX

Prototype

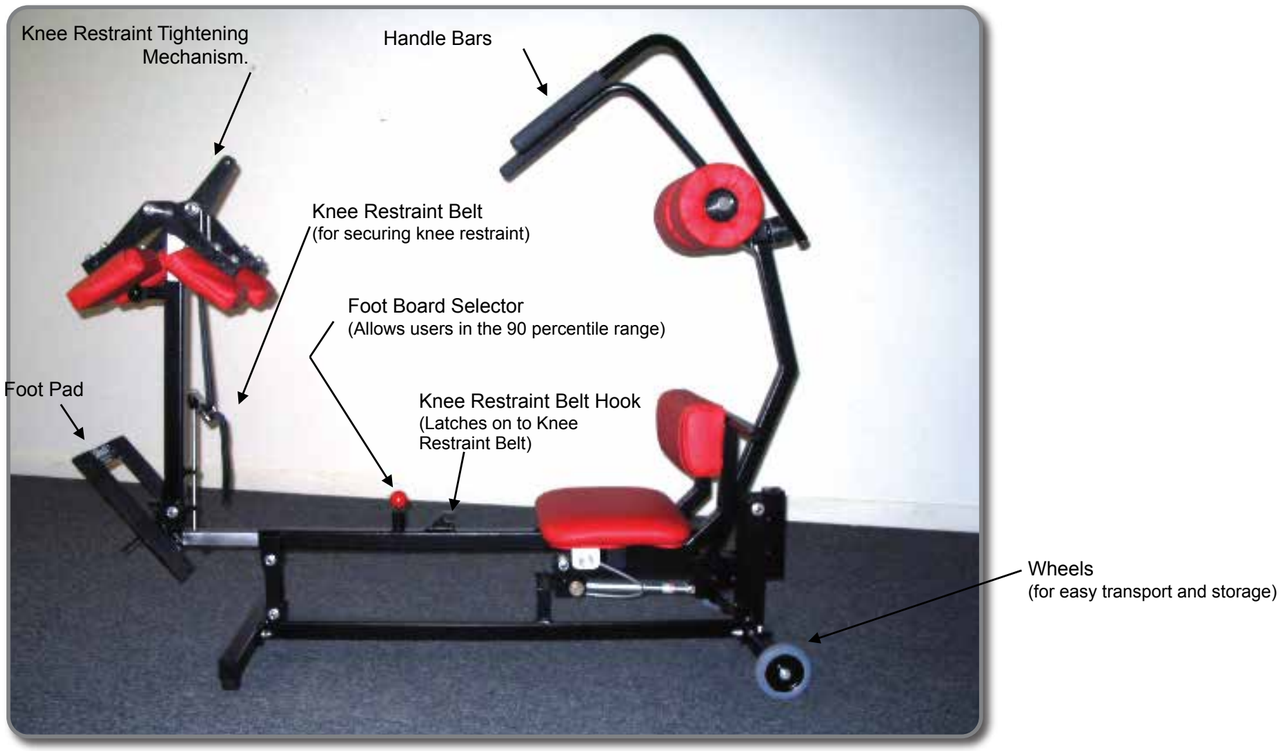

MEDX

Final concept

MHM
2024

MEDX

MEDX

medx motion line - 1 year

MEDX

idea

To create the next generation of MedX equipment and re-establish MedX as the world leader in exercise and physical therapy.

MEDX

MedX pioneered the concept of Medical Exercise Technology by combining effective testing and resistance exercise to health enhancement and rehabilitation.

objectives

- Redefine medical, rehabilitation and fitness equipment with the introduction of its patent-protected next generation medical and fitness lines in 2007.
- Have fewer parts
- More parts common to all machines
- Easier and faster to assemble
- Lower cost to manufacture
- More easily disassembled for shipping and installation

requirements

- Less frictio
- Customizable range of motion
- Programmable
- Incremental resistance changes: 0.25 Kg vs. 1.0 Kg
- User friendly interface screen and keypad
- Powder coat finish
- Molded upholstery
- Shorter weight stack
- Modular system

MEDX

competitors

current technology

current product line

MEDX

early concepts

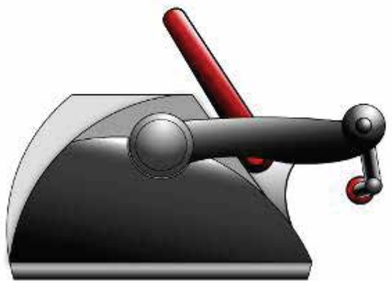

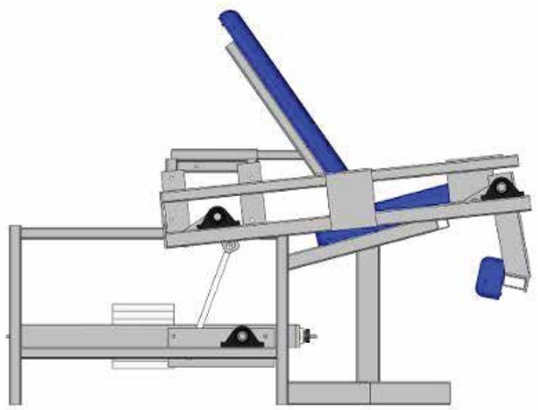

engineering specs

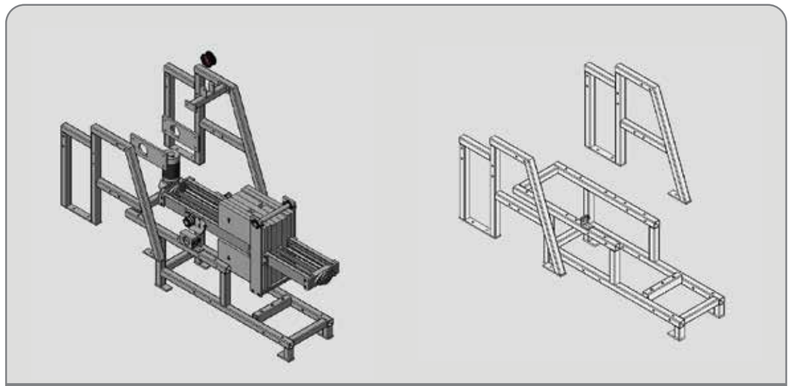

weight module

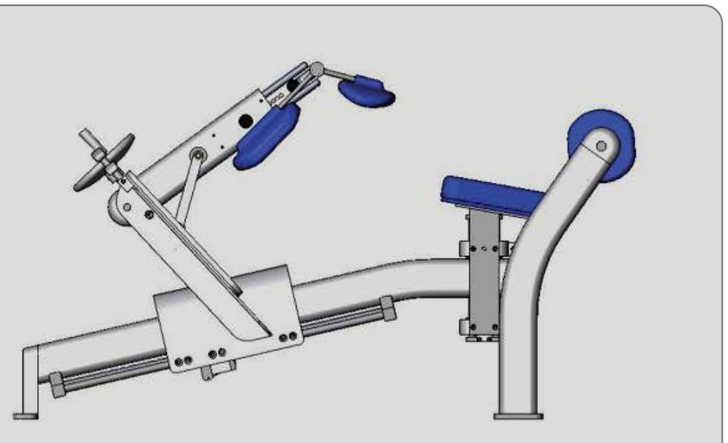

restraint system

MEDX

user interface

resistance module

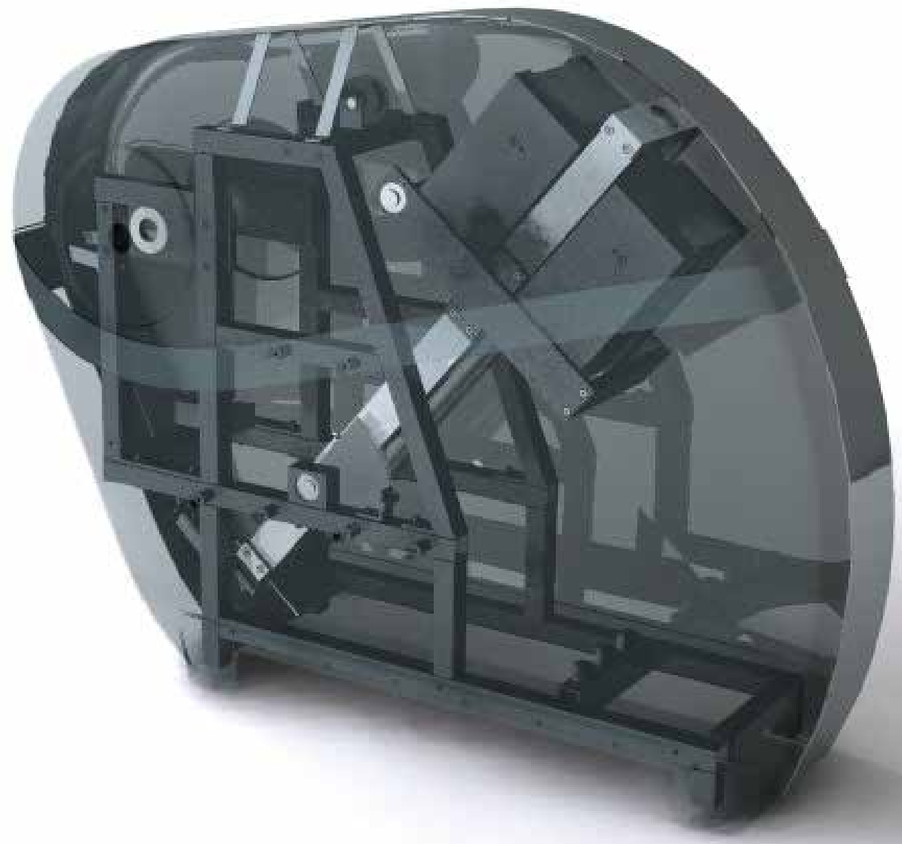

MEDX

Final concept

MHM
2024
MED

MHM
2024

MEDX

MEDX

BRIGGS & RILEY

TRAVELWARE

2009 @work collection

BRIGGS & RILEY
TRAVELWARE

idea

Redesign the current line of briefcases to avoid sale stagnation.

BRIGGS & RILEY
TRAVELWARE

Briggs & Riley is the #1 brand in specialty retail stores. Its current business case line, @work, was loosing market share and needed an effective redesign.

objectives

- improve and renew the design
- lower manufacturing costs
- increase market share
- introduce new technology

requirements

- launch @ TGA 2009
- improve bag durability
- ship August 2009
- create new features

@work collection - developed 2005

research methods

- store visits
- meetings with buyers
- survey sent to current customers
- competitive analysis

research findings

- bags are too heavy
- needs more style
- organization compartment is great
- product has high quality

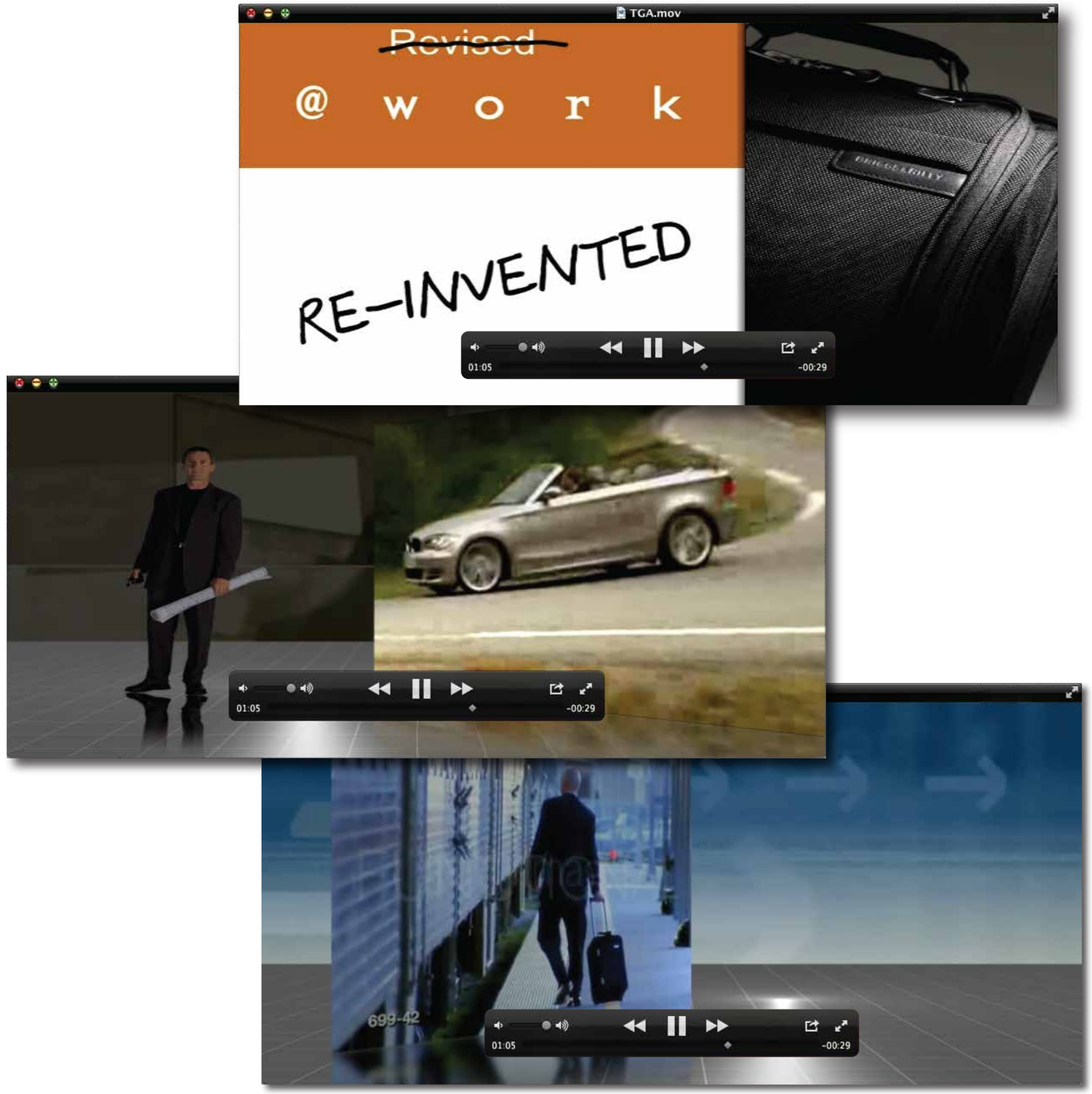

early concepts

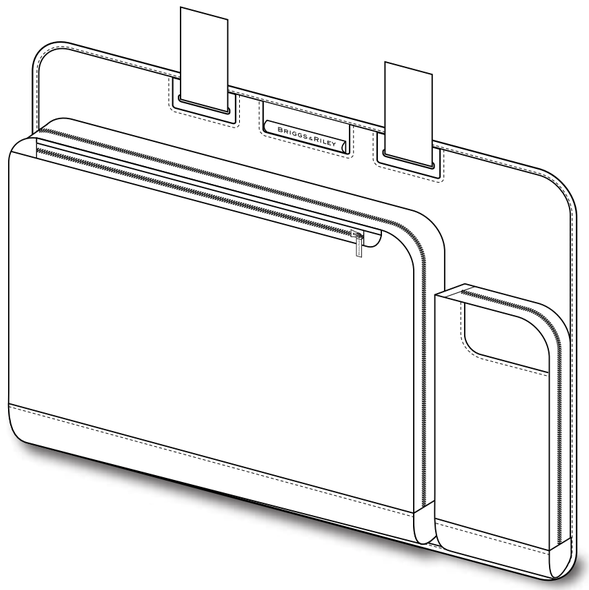

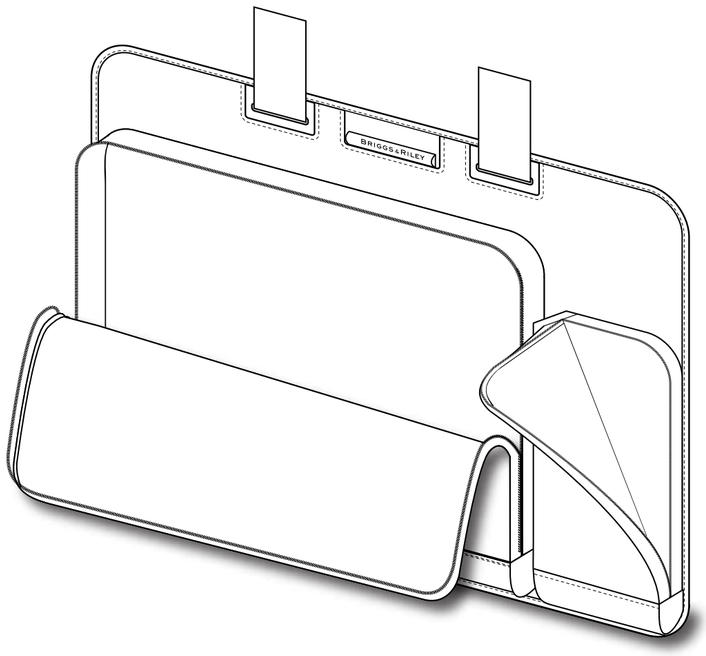

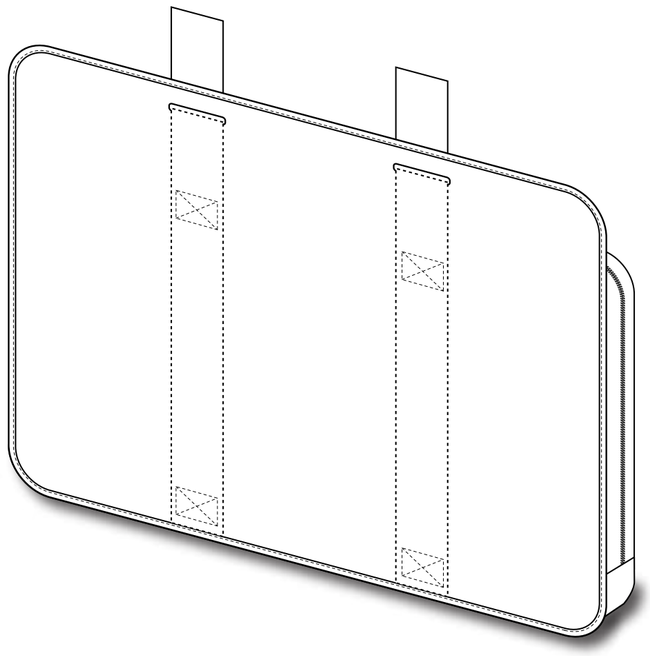

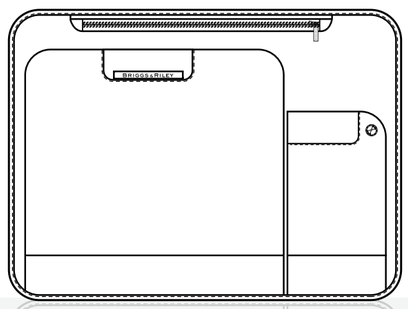

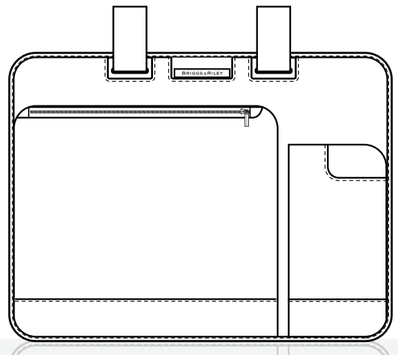

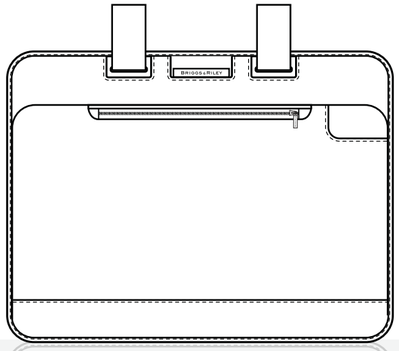

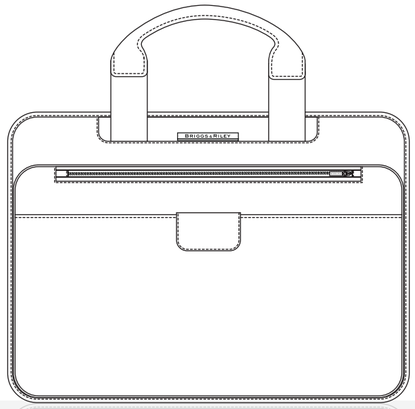

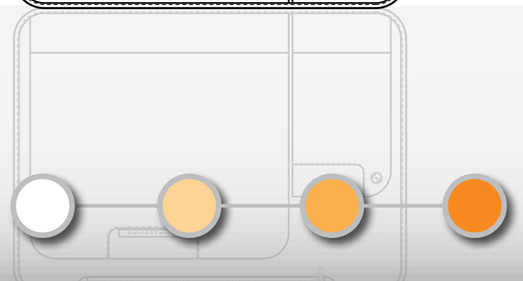

MHM
2024

BRIGGS & RILEY

2009 @Work Collection

15.4" face panel

SR# 09B17

BRIGGS & RILEY
TRAVELWARE

Comments:

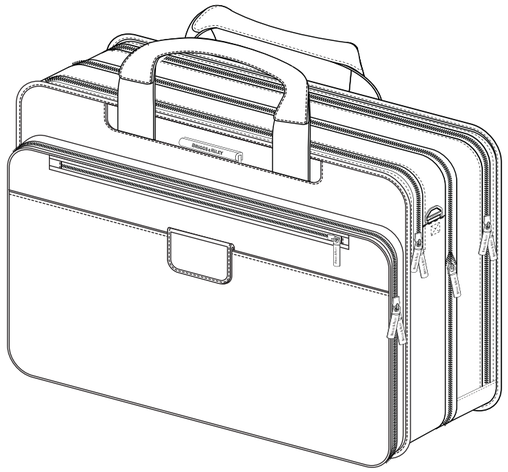

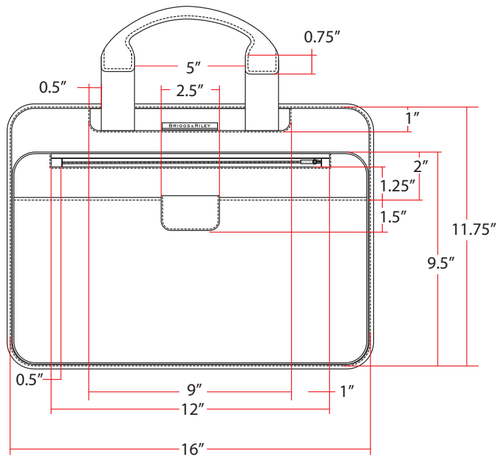

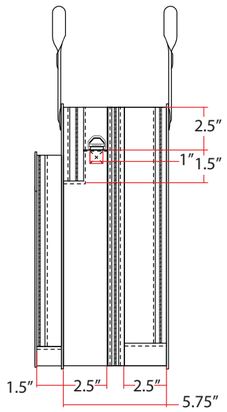

Designer: Michel Moussatche	Revision:					Page 1 of 8
Date Created: 08/18/08	Name:					
Date Approved: 08/18/08	Date:					

2009 @Work Collection

15.4" face panel

SR# 09B17

BRIGGS & RILEY
TRAVELWARE

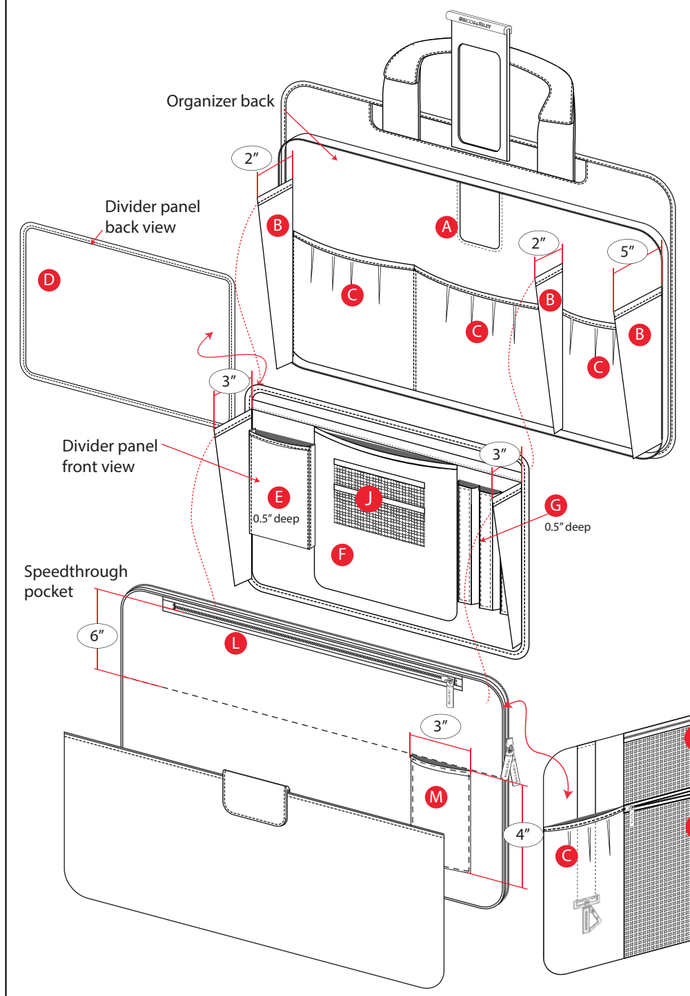

Comments:

A- ID window
B- stretch tech gusset
C- Lining pocket with strechtech gusset
D- Plain linning back
E- Linning with fleece interior pocket with elastic gusset
F- Lining pocket
G- 3 Elastic/lining pen holder
H- Horizontal hard mesh pocket
I- Vertical hard mesh pocket
J- Hard mesh business card holder
K- 2 Elastic/lining USB holder
L- Speedthrough pocket with orange linning inside
M- Stretch tech pocket

Designer: Michel Moussatche	Revision:					Page 4 of 8
Date Created: 08/18/08	Name:					
Date Approved: 08/18/08	Date:					

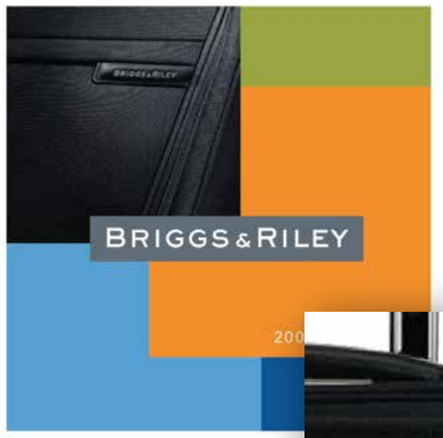
BRIGGS & RILEY

@ work
You're organized to grow.
Meet the support system
that keeps you organized
without compromise.
It works anytime,
anywhere - just like you.
• Lightweight and durable ballistic nylon outer fabric
• Leather touch points for luxurious comfort and durability; leather patch for personalization
• Designed for supreme organization
• Ergonomic shoulder strap for comfort
• Checkpoint friendly collection accommodates netbooks, 13", 15.4" and 17" laptops
• Coordinates with the Baseline collection
colors
black
chocolate
This page: KB401, KR304, KR305
Opposite: KR305
SpeedThru™ pocket for quick storage of items at security checkpoints
SpeedThru™ clamshell protects laptop and speeds you through security
Organizer with padded pockets for tech gear and electronics
Interlocking handle system secures case on top of an Upright®
briggs-riley.com
10

BRIGGS & RILEY

TRAVELWARE

2010 BRX collection

MHM
2024

BRIGGS & RILEY
TRAVELWARE

idea

Create a new line of luggage to compete in a new market. (outdoor industry)

With specialty luggage stores business shrinking, it was imperative for B&R to find new markets. After carefull considerations, the outdoor industry was a logical step. To do that, they needed a new product.

objectives

- break into the OR market
- create an exciting luggage collection
- introduce new technology
- keep manufacturing costs low

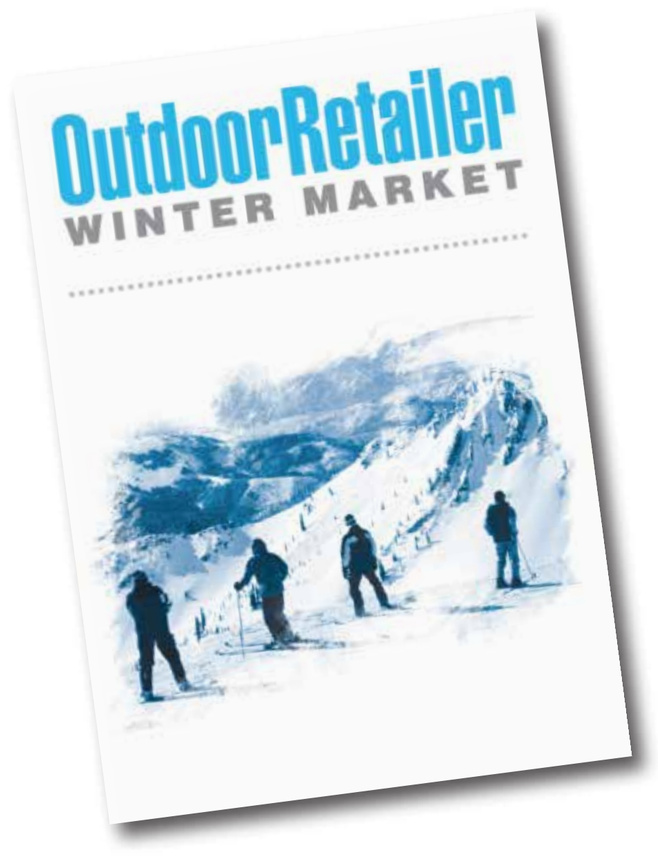

requirements

- launch @ winter OR 2010
- create durable bags
- ship by july 2010
- create new handle system and wheels

research methods

- store visits
- meetings with buyers
- survey sent to current customers
- competitive analysis

research findings

- bags must be lightweight
- must look like Briggs & Riley DNA
- pricepoint must be bellow $299 for carry-on size
- product has to be high quality

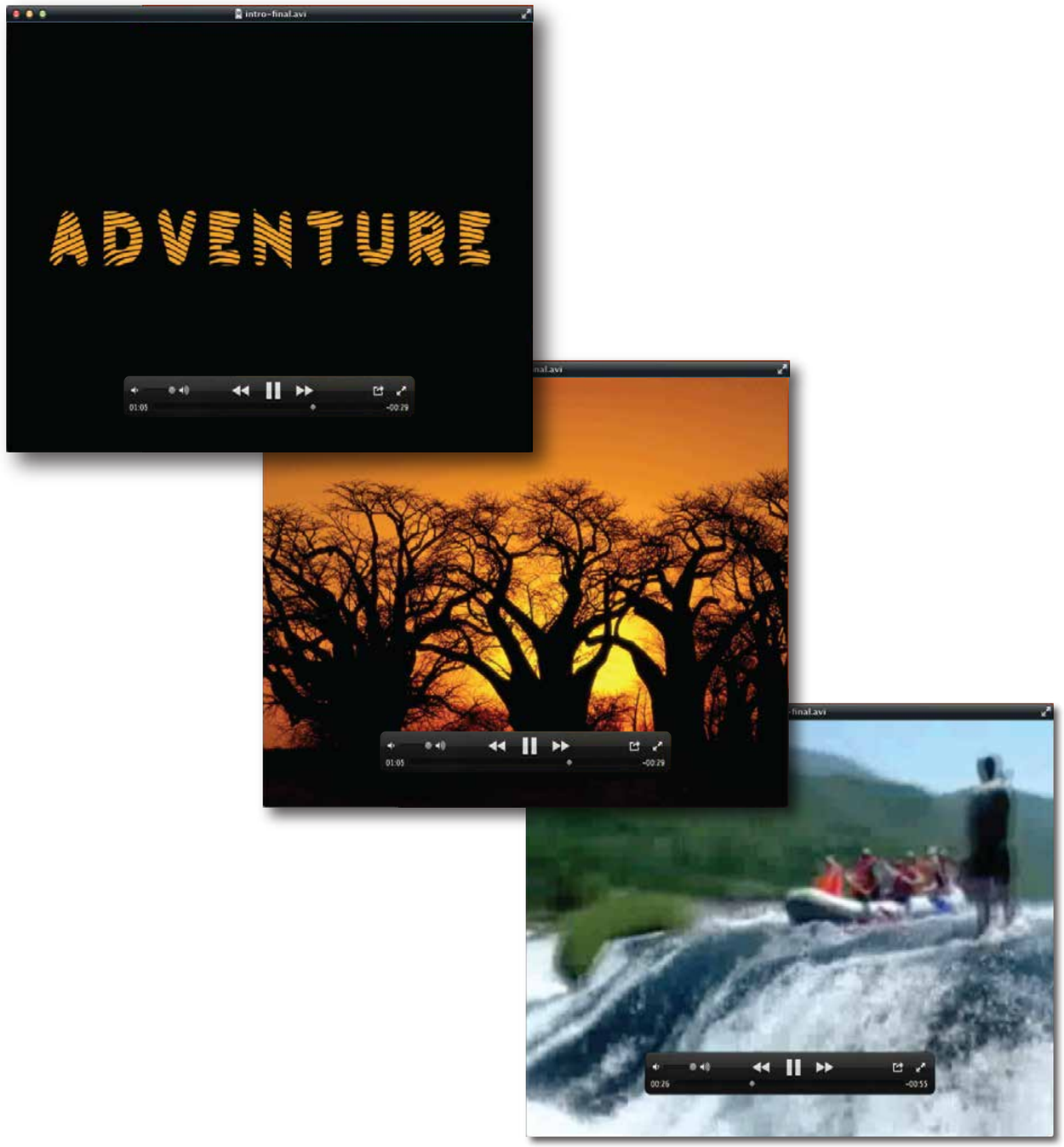

BRIGGS & RILEY
TRAVELWARE

early concepts

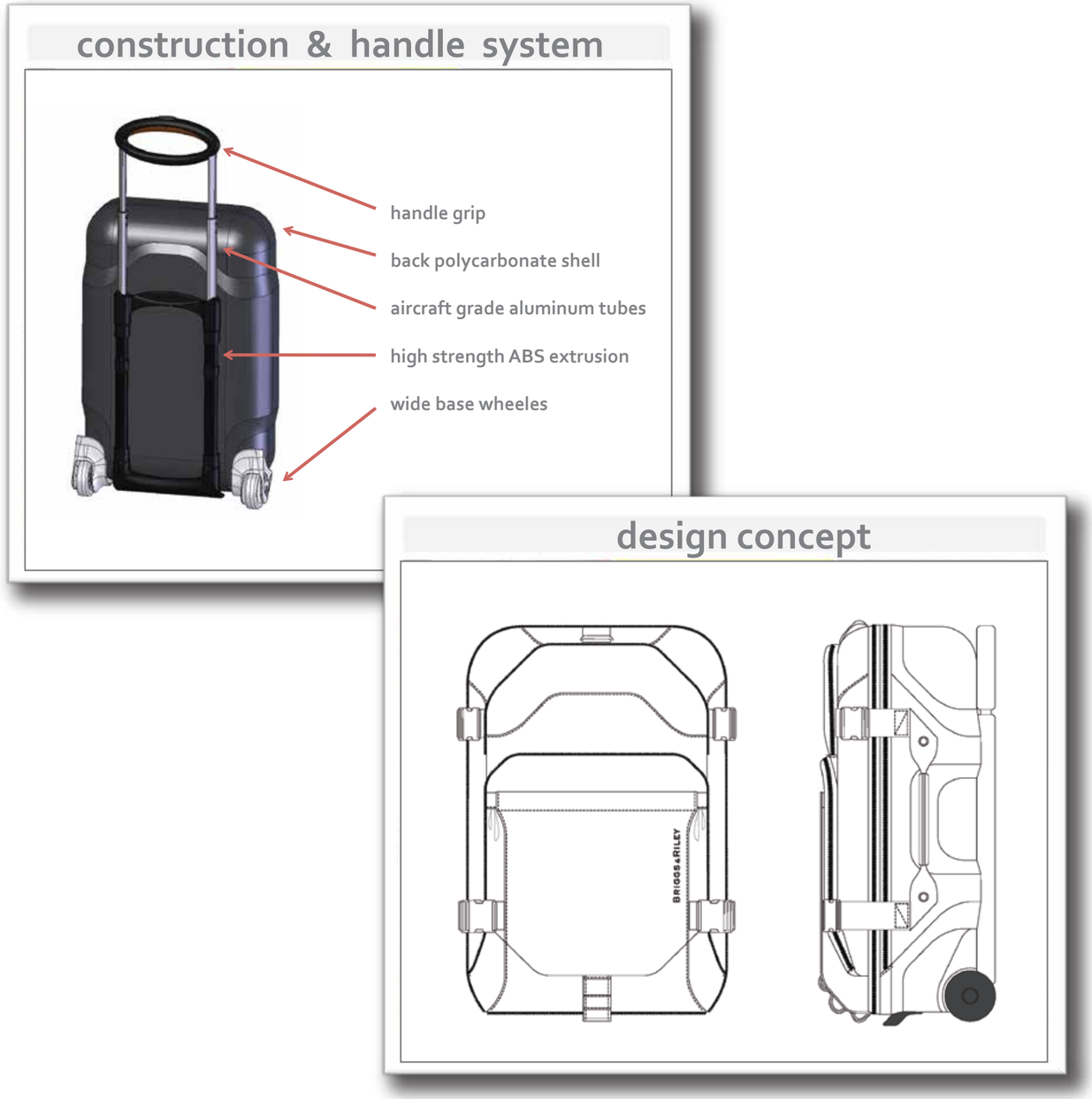

BRIGGS & RILEY
TRAVELWARE

docking system

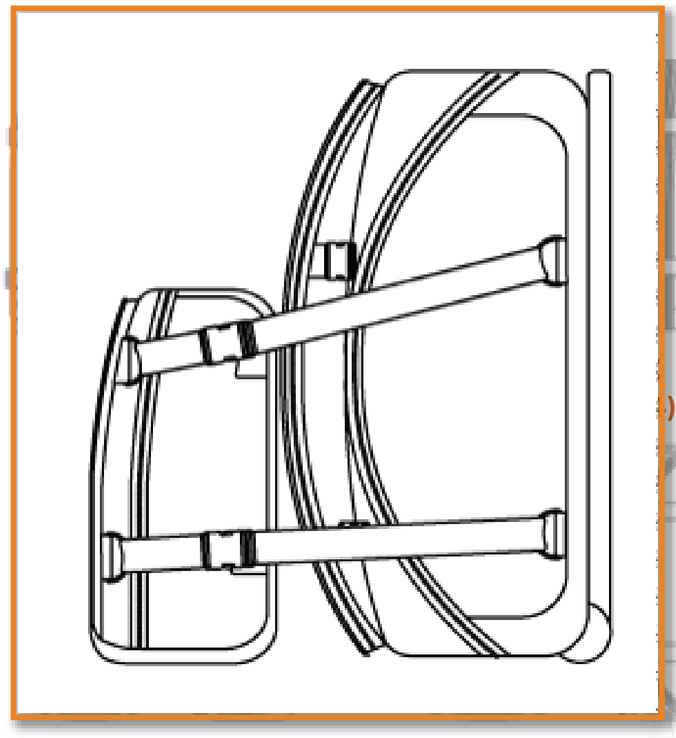

18″ Duffel X
18″x11″x12″

24″ Duffel X
24″x14″x15″

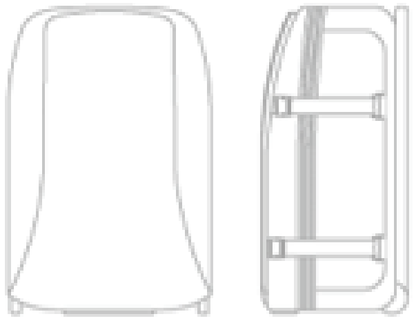

27″ Upright X
27″x18″x(13-16)″

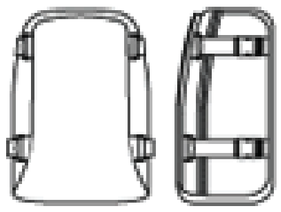

S Backpack X
17″x12″x(8-10)″

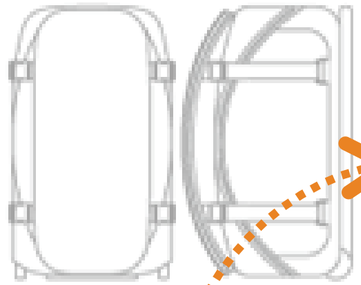

24″ R Duffel X
24″x14″x15″

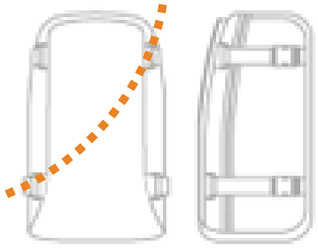

L Backpack X
20″x12″x(10-12)″

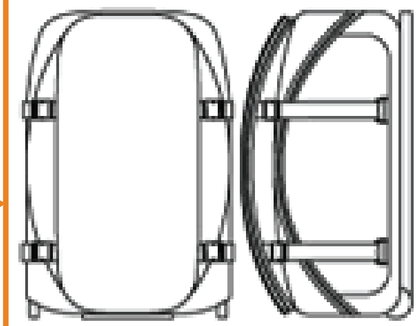

27″ R Duffel X
27″x18″x15″

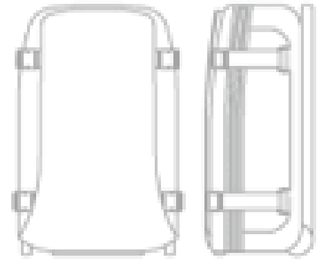

22″ Backpack X
22″x14″x(9-11)″

materials

3M Reflective PVC Exterior

Neon Ripstop Interior Lining

Nylon Box Pattern Exterior

PVC Infused Mesh Interior

PVC Sheet Exterior

Soft Cordura Exterior

BRX

BU122 (SR#63K01)

Explore Upright 22

BRIGGS & RILEY TRAVELWARE

- Article#:11107 (same color as 42232-1 w/ ripstop)
- Exterior Texture sheet (same color as 42232-1 w/ ripstop)
- 42232 no ripstop (same color as 42232-1 w/ ripstop)
- 42232-1 w/ ripstop

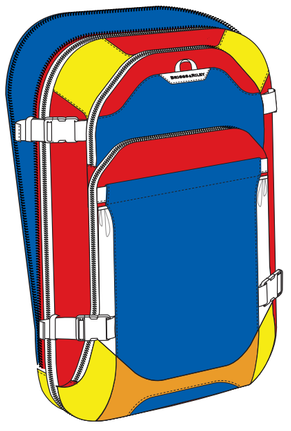

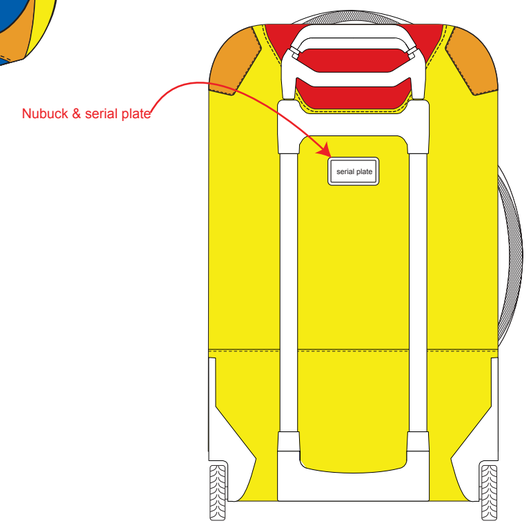

Designer: Joseph Conti	Rev:	R4	R5	R6	R7	page 6 of 10
Date Created: 4.21.09	Name:	MHM	MHM	MHM	MHM	
Date Approved:	Date:	10/06/09	10/26/09	12/07/09	1/12/09	

BRIGGS & RILEY
TRAVELWARE

National Geographic Gear of the Year 2010.

BRX Exchange Duffle

To quote National Geographic editor Stephen Casmiro, “Every season, a few products are better than great. They’re so extraordinarily designed, creative, or innovative, they can only be called one thing: the best.” To those products go the spoils, recognized by National Geographic as their Gear of the Year. For 2010, we are proud to say, the luggage category had only one representative — The BRX Exchange 26 Duffle.

We are humbled by the honor and frankly, we couldn’t have said it better ourselves.

Learn more at the official National Geographic Gear of the Year 2010 page.

Shop BRX Exchange 26

mano

beats by dr. dre

M+M
2024

mano

idea

Develop a stylish line of electronics accessories and create a new brand.

Mano was a startup company that I was part of with 1 other partner. Our goal was to design electronic accessories that would allow people to use their tecnologies in better ways. Our first 2 projects were an accessory that would combine that ipod nano and the beats by dr. dre headphones and a watch band that would fit the ipod nano.

objectives

- create a new type of accessory
- combine 2 popular consumer goods that commonly used together.
- create a watch that was stylish and easy to use

requirements

- be easy to connect and disconect
- low production cost
- fit within the beats brand but also stand on its own as the mano brand.

research methods

- store visits
- online research
- meeting with music industry execs
- competitive analysis

research findings

- must be easy to use
- can’t look dorky and gimmecky
- needs to be cool and look like its part of the design
- product has to be high quality

early concepts

mano w/
ipod nano on

mano w/
ipod nano off

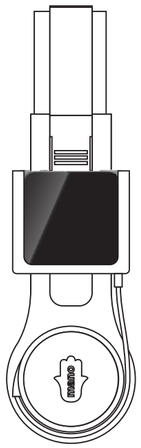

mano w/ out
ipod nano

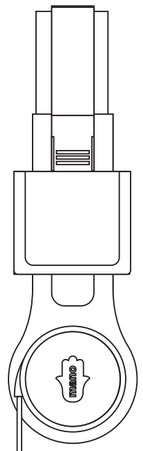

mano w/ out
ipod nano attachment

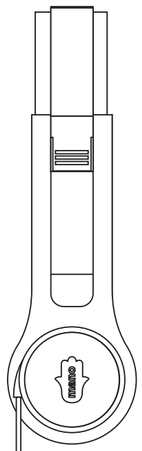

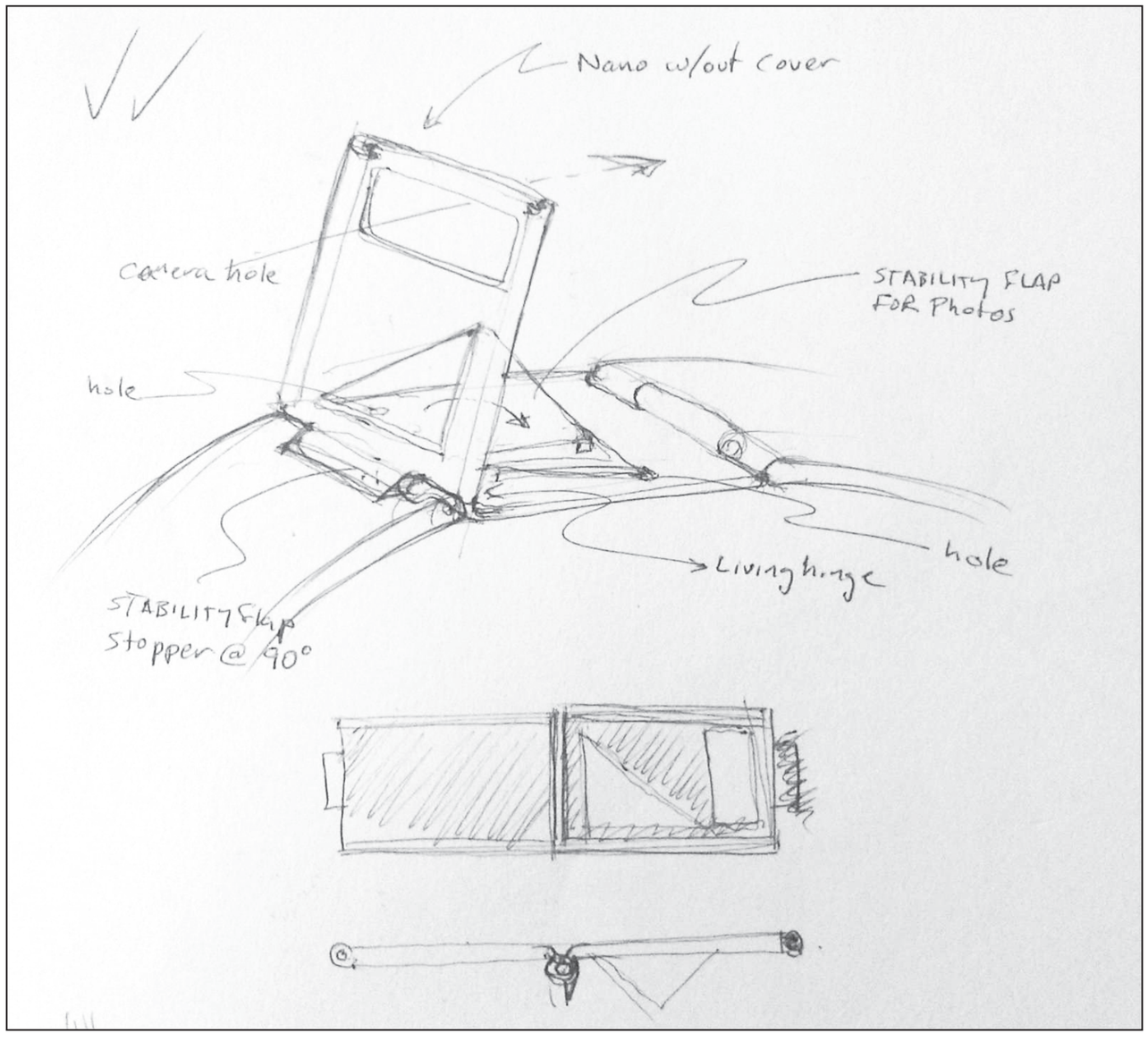

“The Nano Doc”`

Issues:

How to deal with headset cable management for active people?

How to conveniently secure iPod Nano to Beats Headsets?

Shorter cable eliminates tangling, catching, pulling and other inconveniences.

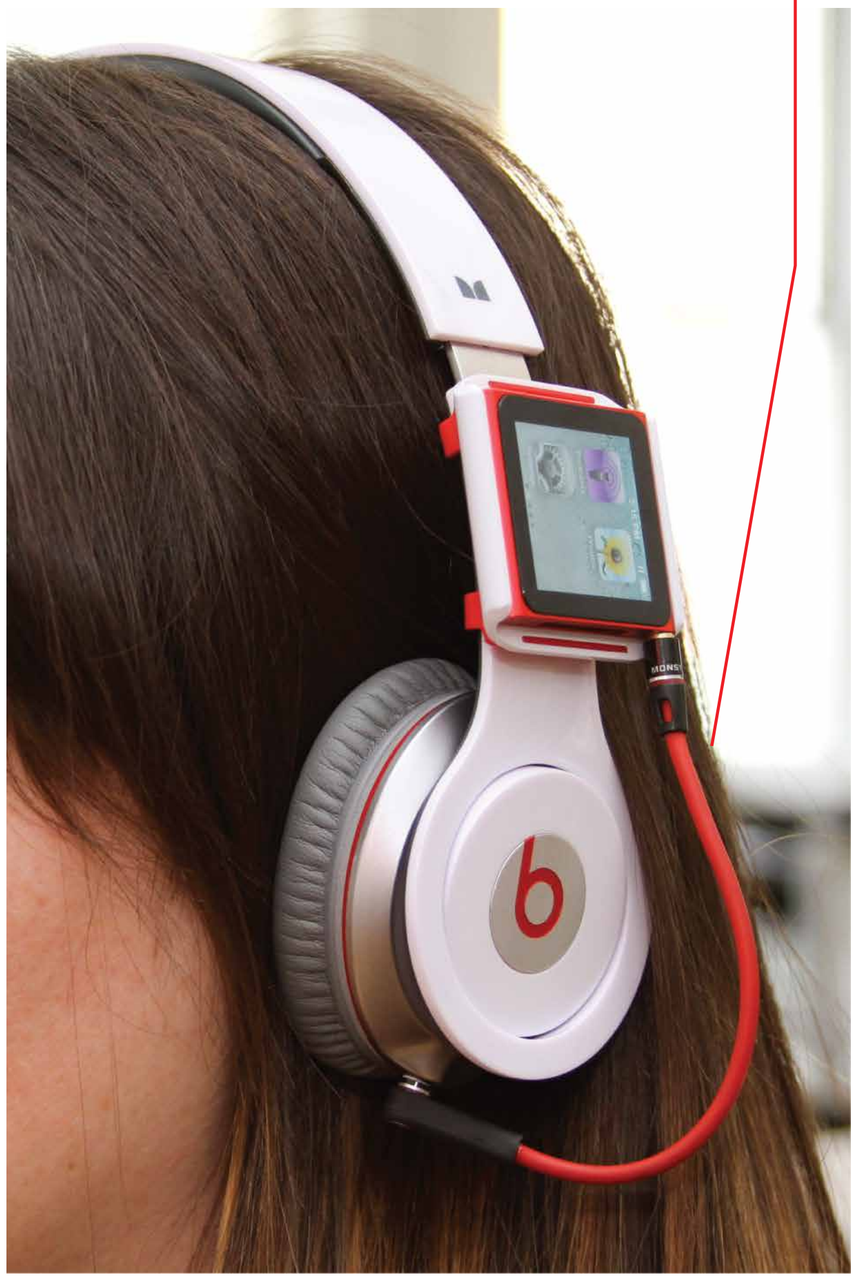

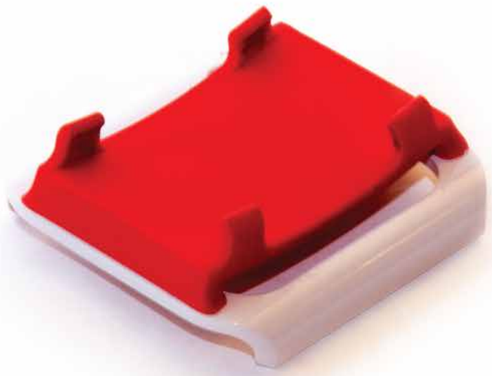

Dual-shot injection molded part protects Nano and has soft rubber back for easy placement and removal

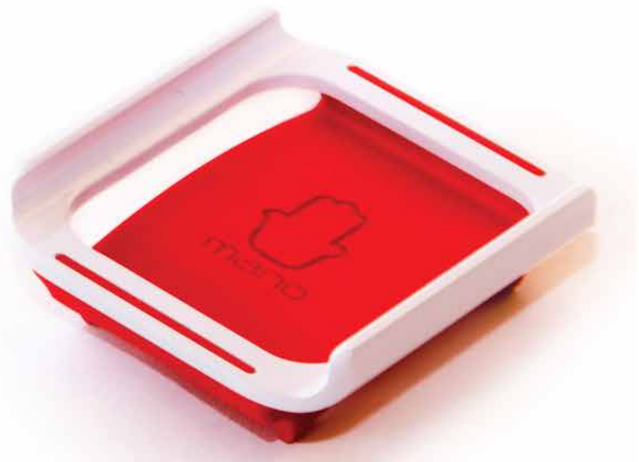

Black Red White

mano

Concept Variation #2:

Clip mounts to Beats headset.

Nano would slide in and engage with fixed cable jack oriented in the vertical position.

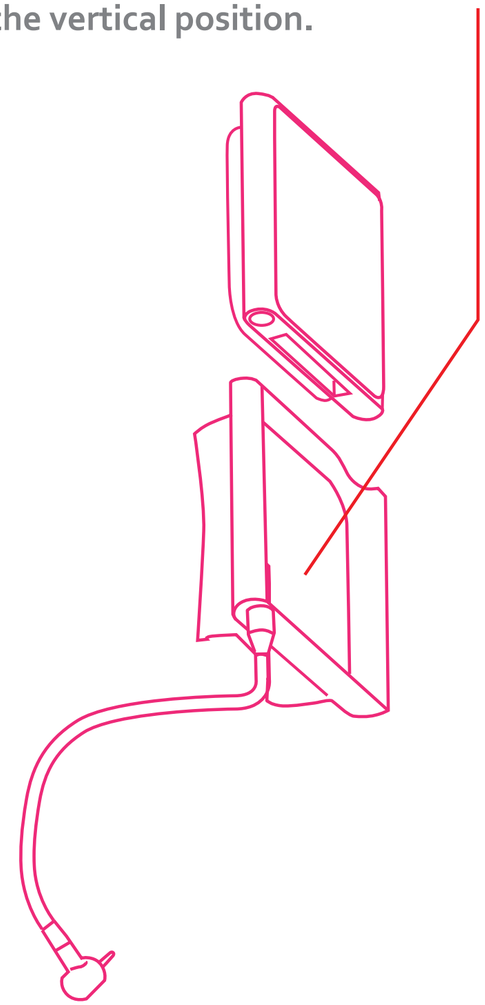

“The Mano Clip”

All clip and docking design concepts can be applied to Beats; Pro, Studio, Detox, Solo & Solo HD models.

The Mano Clip has a nearly invisible profile when in use.

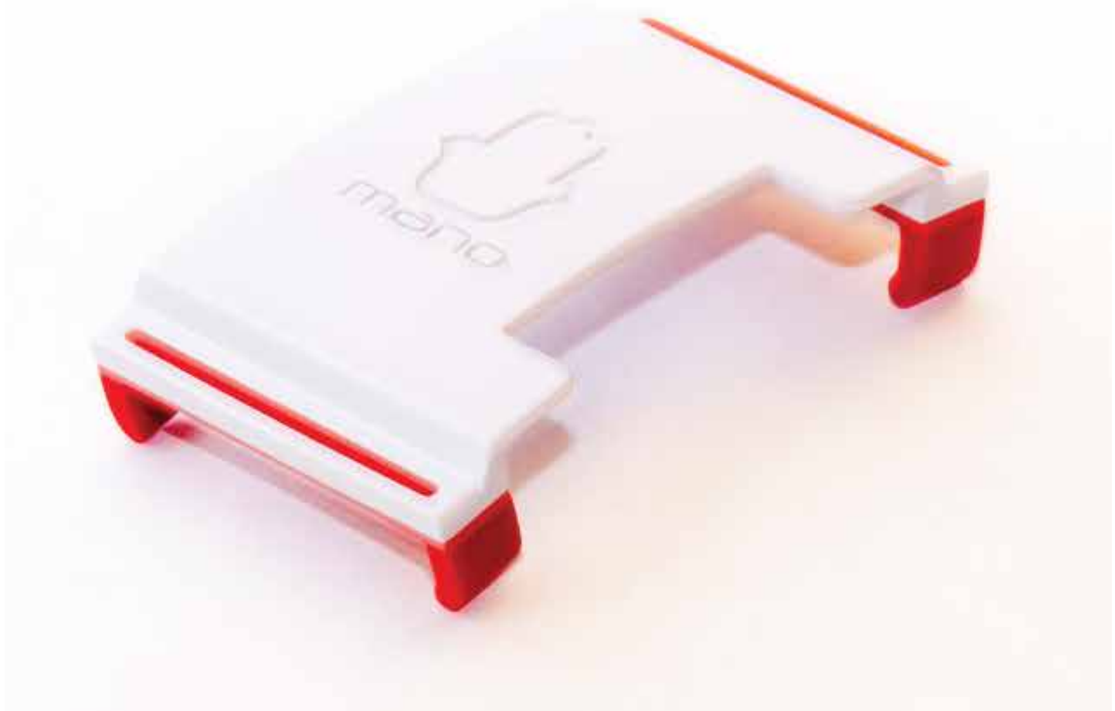

“The Mano Flip Watch”